PARTIES ESSENTIELLES

1. Poignée
2. Tension aiguille droite (rouge)
3. Tension aiguille gauche (bleu)
4. Guide de couture orienté sur ordinateur (PRO-4 DC)
5. Couvercle sabot
6. Levier de tension réseau
7. Tige guide fil
8. Bouton de réglage longueur de points
9. Bouton de réglage différentiel
10. Tige pointeuse
11. Pied pointeuse
12. Espace cadeau
13. Interrupteur principal
14. Cordon connecteur (PRO-4 DC)
15. Chaîne tour guide de couture (PRO-4 DC)
16. Molecule de crosse (PRO-4 DC)
17. Inter-frame
18. Tension-boucleur supérieur (gauche)
19. Tension-boucleur inférieur (vert)
20. Inhalé
21. Pompe (PRO-4 DC)
22. Pompe (PRO-4 DE)
23. Levier pied presse-étoffe
24. Bride aiguille
25. Aiguille gauche
26. Aiguille droite
27. Boucleur supérieur
28. Boucleur inférieur
29. Lame-couteau mobile
30. Lame-couteau fixe
31. Pied presse-étoffe (3000/1 – 3)
32. Plaque aiguille "A" (3000/1 – 2)
33. Bouton de dégagement plaque aiguille
34. Indicateur largeur de coupe
35. Bouton de dégagement de la lame-couteau
36. Contrôle de largeur de coupe

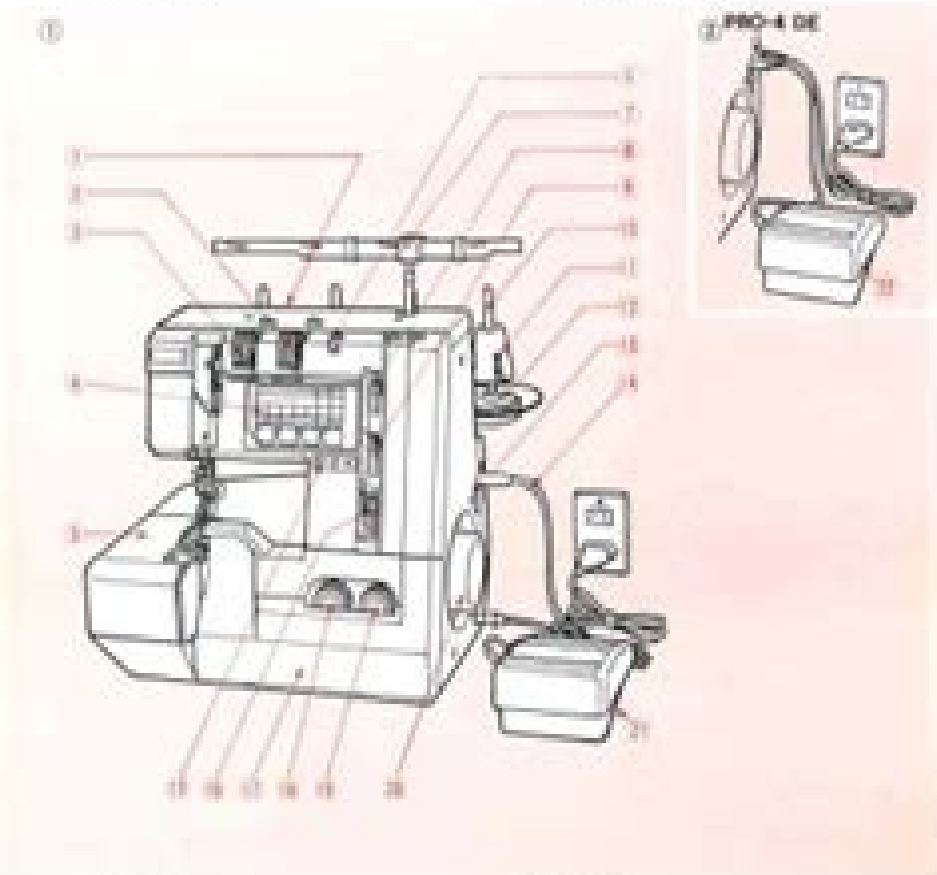

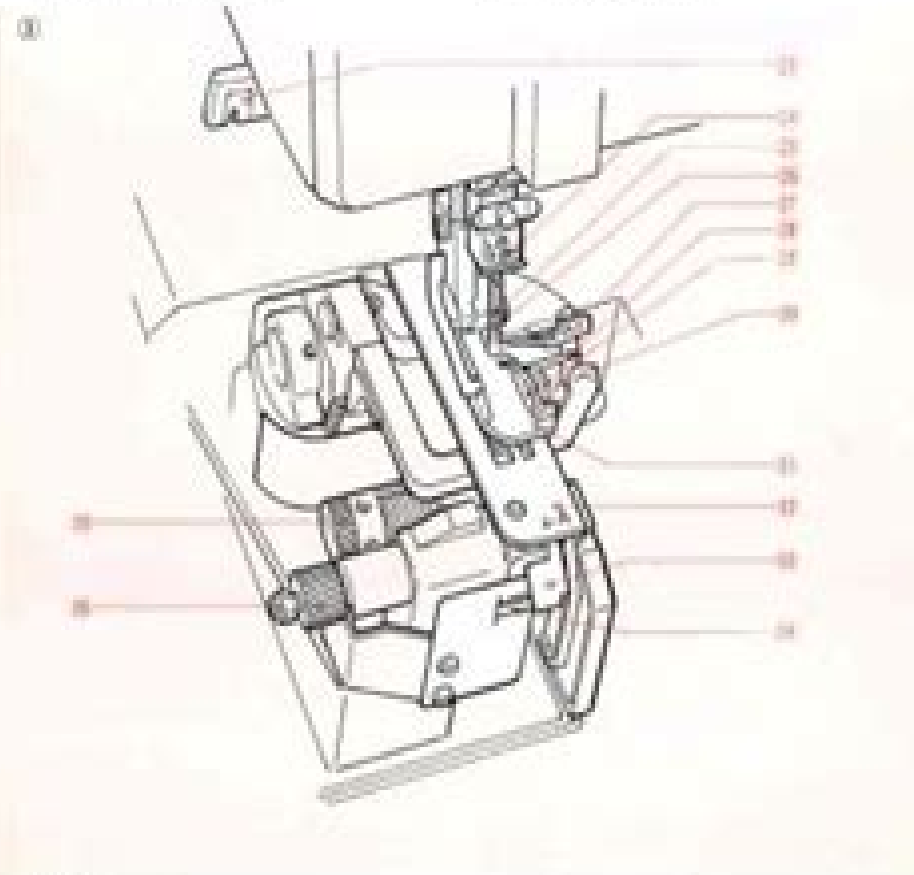

MAIN PARTS

1. Camera plate
2. Right needle thread tension (red)
3. Left needle thread tension (blue)
4. Contrôle display sewing guide (PRO-4 DC)
5. Side cover
6. Tension release lever
7. Thread guide pole
8. Stitch length knob
9. Differential feed control knob
10. Speed pin
11. Speed holder
12. Speed pin base
13. Main switch
14. Mains connection (PRO-4 DC)
15. Keyboard for sewing guide (PRO-4 DC)
16. Speed indicator (PRO-4 DC)
17. Front flap
18. Upper lopper thread tension (yellow)
19. Lower lopper thread tension (green)
20. Flywheel
21. Foot control (PRO-4 DC)
22. Foot control (PRO-4 DC)
23. Proper foot lever
24. Needle stand
25. Left needle
26. Right needle
27. Upper loader
28. Lower loader
29. Moving blade
30. Fixed blade
31. Presser foot (3000/1 – 3)
32. Needle plate "A" (3000/1 – 2)
33. Needle plate release knob
34. Cutting width indicator
35. Cutter release knob
36. Cutting width control

Downloaded from www.Manualsonid.com

Elna Sewing Machine Manual Pro 4

Myra Coles

Elna Sewing Machine Manual Pro 4:

Consumer Reports ,1955 **National 4-H Club News** ,1985 **Home Economics and Domestic Subjects Review** ,1970 *Threads Magazine* ,2002 *The EBay Price Guide* Julia L. Wilkinson,2006 Provides lists of selling prices of items found on eBay in such categories as antiques boats books cameras coins collectibles dolls DVDs real estate stamps tickets and video games *Home Economics & Technology* ,1992 *Iowa Farm Science* ,1961 *Editor & Publisher Market Guide* ,1966 The Complete Computer Sewing Book Myra Coles,1987 *Housecraft* ,1976 *Space Buyers' Guide Number* ,1959 *Handbook of Buying Issue* ,1967 Braby's East London Directory and Buyer's Guide ,1987

Consumers' Research Annual Cumulative Bulletin for ... ,1954 **Official Gazette of the United States Patent Office** United States. Patent Office,1938 *Electrical Times* ,1961 **American Gas Journal** ,1955 **Alphabet Stitchery by Hand and Machine** Carolyn Vosburg Hall,1995 Give your clothes a touch of class using these step by step instructions for all the basics of lettering by hand or sewing machine Features embroidery monogramming photo transfer and much more With complete illustrations and photos **Swiss Technics** ,1959 **Radio Daily-television Daily** ,1953

Right here, we have countless book **Elna Sewing Machine Manual Pro 4** and collections to check out. We additionally find the money for variant types and also type of the books to browse. The customary book, fiction, history, novel, scientific research, as capably as various extra sorts of books are readily friendly here.

As this Elna Sewing Machine Manual Pro 4, it ends stirring physical one of the favored ebook Elna Sewing Machine Manual Pro 4 collections that we have. This is why you remain in the best website to see the unbelievable ebook to have.

https://old.whatgoodnews.com/results/book-search/fetch.php/little%20hamster%20i%20can%20read%20by%20myself.pdf

Table of Contents Elna Sewing Machine Manual Pro 4

1. Understanding the eBook Elna Sewing Machine Manual Pro 4
    - The Rise of Digital Reading Elna Sewing Machine Manual Pro 4
    - Advantages of eBooks Over Traditional Books
2. Identifying Elna Sewing Machine Manual Pro 4
    - Exploring Different Genres
    - Considering Fiction vs. Non-Fiction
    - Determining Your Reading Goals
3. Choosing the Right eBook Platform
    - Popular eBook Platforms
    - Features to Look for in an Elna Sewing Machine Manual Pro 4
    - User-Friendly Interface
4. Exploring eBook Recommendations from Elna Sewing Machine Manual Pro 4
    - Personalized Recommendations
    - Elna Sewing Machine Manual Pro 4 User Reviews and Ratings
    - Elna Sewing Machine Manual Pro 4 and Bestseller Lists
5. Accessing Elna Sewing Machine Manual Pro 4 Free and Paid eBooks
    - Elna Sewing Machine Manual Pro 4 Public Domain eBooks

- Elna Sewing Machine Manual Pro 4 eBook Subscription Services
- Elna Sewing Machine Manual Pro 4 Budget-Friendly Options

6. Navigating Elna Sewing Machine Manual Pro 4 eBook Formats
   - ePub, PDF, MOBI, and More
   - Elna Sewing Machine Manual Pro 4 Compatibility with Devices
   - Elna Sewing Machine Manual Pro 4 Enhanced eBook Features
7. Enhancing Your Reading Experience
   - Adjustable Fonts and Text Sizes of Elna Sewing Machine Manual Pro 4
   - Highlighting and Note-Taking Elna Sewing Machine Manual Pro 4
   - Interactive Elements Elna Sewing Machine Manual Pro 4
8. Staying Engaged with Elna Sewing Machine Manual Pro 4
   - Joining Online Reading Communities
   - Participating in Virtual Book Clubs
   - Following Authors and Publishers Elna Sewing Machine Manual Pro 4
9. Balancing eBooks and Physical Books Elna Sewing Machine Manual Pro 4
   - Benefits of a Digital Library
   - Creating a Diverse Reading Collection Elna Sewing Machine Manual Pro 4
10. Overcoming Reading Challenges
    - Dealing with Digital Eye Strain
    - Minimizing Distractions
    - Managing Screen Time
11. Cultivating a Reading Routine Elna Sewing Machine Manual Pro 4
    - Setting Reading Goals Elna Sewing Machine Manual Pro 4
    - Carving Out Dedicated Reading Time
12. Sourcing Reliable Information of Elna Sewing Machine Manual Pro 4
    - Fact-Checking eBook Content of Elna Sewing Machine Manual Pro 4
    - Distinguishing Credible Sources
13. Promoting Lifelong Learning
    - Utilizing eBooks for Skill Development
    - Exploring Educational eBooks

14. Embracing eBook Trends
    - Integration of Multimedia Elements
    - Interactive and Gamified eBooks

Elna Sewing Machine Manual Pro 4 Introduction

In the digital age, access to information has become easier than ever before. The ability to download Elna Sewing Machine Manual Pro 4 has revolutionized the way we consume written content. Whether you are a student looking for course material, an avid reader searching for your next favorite book, or a professional seeking research papers, the option to download Elna Sewing Machine Manual Pro 4 has opened up a world of possibilities. Downloading Elna Sewing Machine Manual Pro 4 provides numerous advantages over physical copies of books and documents. Firstly, it is incredibly convenient. Gone are the days of carrying around heavy textbooks or bulky folders filled with papers. With the click of a button, you can gain immediate access to valuable resources on any device. This convenience allows for efficient studying, researching, and reading on the go. Moreover, the cost-effective nature of downloading Elna Sewing Machine Manual Pro 4 has democratized knowledge. Traditional books and academic journals can be expensive, making it difficult for individuals with limited financial resources to access information. By offering free PDF downloads, publishers and authors are enabling a wider audience to benefit from their work. This inclusivity promotes equal opportunities for learning and personal growth. There are numerous websites and platforms where individuals can download Elna Sewing Machine Manual Pro 4. These websites range from academic databases offering research papers and journals to online libraries with an expansive collection of books from various genres. Many authors and publishers also upload their work to specific websites, granting readers access to their content without any charge. These platforms not only provide access to existing literature but also serve as an excellent platform for undiscovered authors to share their work with the world. However, it is essential to be cautious while downloading Elna Sewing Machine Manual Pro 4. Some websites may offer pirated or illegally obtained copies of copyrighted material. Engaging in such activities not only violates copyright laws but also undermines the efforts of authors, publishers, and researchers. To ensure ethical downloading, it is advisable to utilize reputable websites that prioritize the legal distribution of content. When downloading Elna Sewing Machine Manual Pro 4, users should also consider the potential security risks associated with online platforms. Malicious actors may exploit vulnerabilities in unprotected websites to distribute malware or steal personal information. To protect themselves, individuals should ensure their devices have reliable antivirus software installed and validate the legitimacy of the websites they are downloading from. In conclusion, the ability to download Elna Sewing Machine Manual Pro 4 has transformed the way we access information. With the convenience, cost-effectiveness, and accessibility it offers, free PDF downloads have become a popular choice for students, researchers, and

book lovers worldwide. However, it is crucial to engage in ethical downloading practices and prioritize personal security when utilizing online platforms. By doing so, individuals can make the most of the vast array of free PDF resources available and embark on a journey of continuous learning and intellectual growth.

FAQs About Elna Sewing Machine Manual Pro 4 Books

1. Where can I buy Elna Sewing Machine Manual Pro 4 books? Bookstores: Physical bookstores like Barnes & Noble, Waterstones, and independent local stores. Online Retailers: Amazon, Book Depository, and various online bookstores offer a wide range of books in physical and digital formats.
2. What are the different book formats available? Hardcover: Sturdy and durable, usually more expensive. Paperback: Cheaper, lighter, and more portable than hardcovers. E-books: Digital books available for e-readers like Kindle or software like Apple Books, Kindle, and Google Play Books.
3. How do I choose a Elna Sewing Machine Manual Pro 4 book to read? Genres: Consider the genre you enjoy (fiction, non-fiction, mystery, sci-fi, etc.). Recommendations: Ask friends, join book clubs, or explore online reviews and recommendations. Author: If you like a particular author, you might enjoy more of their work.
4. How do I take care of Elna Sewing Machine Manual Pro 4 books? Storage: Keep them away from direct sunlight and in a dry environment. Handling: Avoid folding pages, use bookmarks, and handle them with clean hands. Cleaning: Gently dust the covers and pages occasionally.
5. Can I borrow books without buying them? Public Libraries: Local libraries offer a wide range of books for borrowing. Book Swaps: Community book exchanges or online platforms where people exchange books.
6. How can I track my reading progress or manage my book collection? Book Tracking Apps: Goodreads, LibraryThing, and Book Catalogue are popular apps for tracking your reading progress and managing book collections. Spreadsheets: You can create your own spreadsheet to track books read, ratings, and other details.
7. What are Elna Sewing Machine Manual Pro 4 audiobooks, and where can I find them? Audiobooks: Audio recordings of books, perfect for listening while commuting or multitasking. Platforms: Audible, LibriVox, and Google Play Books offer a wide selection of audiobooks.
8. How do I support authors or the book industry? Buy Books: Purchase books from authors or independent bookstores. Reviews: Leave reviews on platforms like Goodreads or Amazon. Promotion: Share your favorite books on social media or recommend them to friends.

9. Are there book clubs or reading communities I can join? Local Clubs: Check for local book clubs in libraries or community centers. Online Communities: Platforms like Goodreads have virtual book clubs and discussion groups.
10. Can I read Elna Sewing Machine Manual Pro 4 books for free? Public Domain Books: Many classic books are available for free as theyre in the public domain. Free E-books: Some websites offer free e-books legally, like Project Gutenberg or Open Library.

Find Elna Sewing Machine Manual Pro 4 :

little hamster i can read by myself
little foreign devil
~~little nemo~~
little bear goodnight little bear
little girls bible boardbooks 4s
litterature moderne du monde francophone une anthologie
literature of theology a guide for students and pastors
literatura medieval volume 3
literature criticism from 1400 to 1800 vol 115
little monkeys boo-boo playskool bright beginnings
~~little black dreb~~
little of faeries the little of series
~~literatura vasca historia cr tica de la literatura hispanica~~
little duck finger puppet
little bill extra thankful thanksgiving

Elna Sewing Machine Manual Pro 4 :

atlas of histology with functional correlations lww - Oct 06 2023
web master histology with idealized and actual photomicrography this thirteenth edition of atlas of histology with functional correlations formerly difiore s provides a rich understanding of the basic histology concepts that medical and allied health students need to know realistic full color illustrations as well as actual photomicrographs of
histology a text and atlas with correlated cell and molecular - Oct 26 2022

web selected as a doody s core title for 2022 combining a reader friendly textbook and a rich full color atlas this bestselling resource equips medical dental health professions and undergraduate biology and cell biology students with a comprehensive grasp of the clinical and functional correlates of histology and a vivid understanding of the structural and

anatlab histology on the app store - Apr 19 2022

web aug 30 2017 a complete atlas of histology slides viewable at cellular detail through a cloud based streaming virtual microscope the anatlab histology atlas app provides mobile access to a complete collection of ultra high resolution histology microscopic slide images this system allows students teachers researchers and the general public to

difiore s atlas of histology with functional correlations - Dec 28 2022

web student resources online e book interactive question bank for chapter review and interactive atlas featuring all images from the book more than 450 additional micrographs difiore s atlas of histology is the perfect resource for

atlas of histology with functional and clinical correlations - Mar 31 2023

web 0781797594 9780781797597 bibtex a comprehensive histology atlas with extras the unique atlas of histology with functional and clinical correlations covers fundamental histology topics

atlas of histology with functional correlations 13th edition by - Jun 02 2023

web mar 18 2017 master histology with idealized and actual photomicrography this thirteenth edition of atlas of histology with functional correlations formerly difiore s provides a rich understanding of the basic histology concepts that medical and allied health students need to know realistic full color illustrations as well as actual photomicrographs of

histology a text and atlas by ross review kenhub - Nov 26 2022

web oct 30 2023 written by michael h ross and wojciech pawlina two dedicated physicians histology a text and atlas intertwines histology and cell and molecular biology with an ease that is difficult for competitors to match

difiore s atlas of histology with functional correlations - May 01 2023

web lippincott williams wilkins 2008 medical 532 pages difiore s atlas of histology with functional correlations eleventh edition explains basic histology concepts through full color schematic illustrations these illustrations are supplemented by more than 450 digitized full color online photomicrographs of histological images

read free atlas of histology international edition with fun - May 21 2022

web atlas of histology international edition with fun how to succeed at university international edition oct 29 2020 if you re a student hoping to excel at university this inexpensive how to guide is just what you need from selecting a university and orientation to graduation day the volume covers not

atlas of histology with functional correlations 13th ie - Jul 03 2023

web mar 9 2017 master histology with idealized and actual photomicrography this thirteenth edition of atlas of histology

with functional correlations formerly difiore s provides a rich understanding of the basic histology concepts that

atlas of histology thirteenth international edition victor - Sep 24 2022

web atlas of histology with functional correlations thirteenth international edition show more paperback 269 inclusive of vat sold as each split into 4 payments of sr 72 month with service charges included read more sku 487577 publishing ref 9781496310231

atlas of histology international edition with fun pdf uniport edu - Jun 21 2022

web sep 16 2023 atlas of histology international edition with fun 2 10 downloaded from uniport edu ng on september 16 2023 by guest chapter study hints found throughout the text give practical advice to students about mnemonics or other helpful means of understanding or recall connect it features link to

textbook of histology color atlas 5th edition pdf free download - Mar 19 2022

web the fifth edition of textbook of histology color atlas was received well still there have been comments regarding the tiny size of photomicrographs and figures to beat the matter the fifth edition has been designed as our earlier first third editions currently the text is on one page and its figure on the facing page

curran s atlas of histopathology curran r c archive org - Feb 15 2022

web revised edition of color atlas of histopathology includes bibliographical references and index access restricted item true addeddate 2020 08 11 17 32 53 associated names crocker j curran r c color atlas of histopathology boxid ia1898908 camera usb ptp class camera collection set printdisabled

an atlas of histology springerlink - Aug 24 2022

web this atlas filled with photo realistic drawings was prepared to help bridge the gap between the simplicity of diagrams and the more complex real ity of microstructure all of the figures in this atlas were drawn from histological preparations used by students in my histology classes at the level of light microscopy

pdf histology a text and atlas with correlated cell - Aug 04 2023

web dec 27 2019 the fourth edition of the textbook has been revised and updated in accordance with the curricula of medical schools on histology embryology and cytology view full text last updated 21 may 2023

difiore s atlas of histology with functional correlations pdf - Sep 05 2023

web all structures are directly correlated with the most important and essential functional correlations allowing students to efficiently learn histologic structures and their major functions at the same time this new edition features expanded introduction on basic histology techniques and staining as well as a more comprehensive list of stains that

histology a text and atlas by wojciech pawlina wolters kluwer - Feb 27 2023

web jan 30 2019 histology a text and atlas with correlated cell and molecular biology eighth edition international edition by

wojciech pawlina and michael h ross imprint lww sales date 2019 01 30 1072 pages 212 00 x 276 00 mm 1072 pages 212 00 x 276 00 mm trade paperback isbn 9781975115364

atlas of histology for medical students pdf free download - Jul 23 2022

web atlas of adrenal surgery pdf free download clinical ophthalmic oncology basic principles 3rd edition pdf free download features of atlas of histology for medical students pdf following are the features of atlas

difiore s atlas of histology with functional correlations open library - Jan 29 2023

web feb 27 2023 di fiore s atlas of histology with functional correlations 1993 lea febiger in english 7th ed 0812115600 9780812115604 cccc borrow listen libraries near you worldcat 7

organizational management in sap erp hcm sap hr books erp - Apr 14 2023

web organizational management in sap erp hcm see organizational management under the microscope master om basics like structuring objects and relationships and then use advanced tools like manager self services manager s desktop and the organization and staffing interface

training for applications with human capital management hcm in sap erp - Jan 11 2023

web may 10 2023 training for applications with human capital management hcm in sap erp hr305 configuration of master data hr306 configuration of time recording hr505 organizational management hr580 analytics and reporting in hcm hr940 authorizations in sap erp hcm hub030 sap learning hub professional edition

replicating employee master data and organizational sap - May 03 2022

web making basic sap erp hcm settings 37 enabling the business integration builder mode 38 allowing data replication for payroll areas in correction phase 39 enabling the sap erp hcm inbound web services to set up the connection from the

sap help portal - Mar 01 2022

web in your sap erp hcm system you may have active integration between organizational management om and personnel administration pa called pa pd integration pa pd integration synchronizes the organizational management data such as position job organizational unit or cost center between organizational management and

integrating onboarding with sap erp hcm sap blogs - Oct 08 2022

web nov 14 2021 sap successfactors onboarding solution integrates natively with sap successfactors employee central while it s being used as a core hr this has been considered as the preferred setup in many customer situations however some customers still leverage sap erp hcm as the system of record for employee data maintenance

mastering hr management with sap erp hcm sap press - Dec 10 2022

web this is the one resource the hr team needs to get the most out of their hcm implementation all processes in sap hr explained master data time management payroll qa and recruiting case studies best practices customizing steps integration

aspects and role concepts

your hr journey to the cloud repeat opensap - Aug 06 2022

web oct 17 2023 this course is designed to help you prepare for your hr journey to the cloud outline the benefits of sap successfactors hxm suite and deliver the latest hr applications for your organization you will learn about the tools assets and services that will make your move as easy and smooth as possible the course provides practical

sap press is a joint initiative of sap and galileo press the - Nov 09 2022

web sap erp hcm performance management 2007 302 pages 978 1 59229 124 3 mastering sap erp hcm organizational management bonn boston notes on usage this e book is protected by copyright by purchasing this e book you have agreed to accept and adhere to the copyrights you are entitled to use this e book for personal purposes

sap help portal - Jan 31 2022

web but existing hr processes such as payroll time management or custom hr processes still run in an sap erp hcm system landscape if you re using the core hybrid hxm deployment option and want to replicate employee master data and organizational assignments to sap erp hcm go through all implementation steps we describe in this

organizational management in sap erp hcm sap press - May 15 2023

web master om basics like structuring objects and relationships and then use advanced tools like manager self services manager s desktop and the organization and staffing interface learn about evaluation paths hierarchy reporting and how you can strengthen the foundation of your human resources system through integration

sap help portal - Jun 04 2022

web how employee master data and organizational assignments are written to the sap erp hcm system staging area for organizational assignment replication use of integration between organizational management and personnel administration pa pd integration in data replication from employee central

training for sap erp in human capital management hcm - Feb 12 2023

web acquire a range of skills in sap hcm including automating and processing payroll transactions designing and configuring personnel and organizational structures and handling time recording analytic

mastering sap erp hcm organizational management - Jul 17 2023

web jul 28 2008 this book teaches the hcm team how to maximize the organizational management om component of sap erp hcm it takes readers beyond the basics by delving into all aspects of the component as well as the little known concepts

mastering sap erp hcm organizational management - Jun 16 2023

web this book teaches the hcm team how to maximize the organizational management om component of sap erp hcm it takes readers beyond the basics by delving into all aspects of the component as well as the little known concepts

organizational management in human capital management hcm sap - Aug 18 2023
web organizational management in human capital management hcm objectives after completing this lesson you will be able to understand the usage of organizational management organizational management organizational structure object types organizational units organizational units describe the business units in your enterprise
mastering sap erp hcm organizational management - Sep 19 2023
web this book teaches the hcm team how to maximize the organizational management om component of sap erp hcm go beyond the basics by delving into all
configuring the sap successfactors employee master data and - Jul 05 2022
web mar 18 2020 using the instructions of this blog post you will be able to set up the sap cloud platform integration cpi packages the erp webservices required in the sap successfactors employee central master data and organizational assignment to sap erp hcm with the latest version builder integration builder bib
managing monitoring and troubleshooting organizational data - Sep 07 2022
web replicating employee master data and organizational assignments from employee central to sap erp hcm replicating organizational objects from employee central to sap erp hcm find the most current version of these guides in sap help portal at help sap com hr ecintegration
mastering hr management with sap erp hcm sap press - Apr 02 2022
web feb 10 2022 mastering sap erp hcm organizational management pdf filemastering sap erp hcm organizational management 3 4 hr data objects in om 11 integration of om with other sap components
mastering sap erp hcm organizational management - Mar 13 2023
web aug 31 2008 do you want to maximize your sap erp hcm organizational management implementation learn how by going beyond the basics and delving into the key om functions their purpose and how to use and customize them
das ultimative praxisbuch zu windows phone 8 taschenbuch - Jan 27 2022
web das ultimative praxisbuch zu windows phone 8 erklärt ihnen auf über 650 seiten das microsoft betriebssystem für smartphones das handbuch bringt ihnen die
windows phone 8 kochbuch für professionelle apps paperback - Jun 12 2023
web windows phone 8 kochbuch für professionelle apps matthias fischer amazon de books
windows phone 8 kochbuch für professionelle apps overdrive - Sep 03 2022
web windows phone 8 kochbuch für professionelle apps overdrive
windows phone 8 kochbuch für professionelle apps abebooks - May 11 2023
web windows phone 8 kochbuch für professionelle apps von matthias fischer bei abebooks de isbn 10 3868021078 isbn 13

9783868021073 entwickler press
windows phone 8 kochbuch für professionelle apps ebook - Dec 06 2022
web windows phone 8 kochbuch für professionelle apps ebook fischer matthias amazon de bücher
windows phone 8 kochbuch für professionelle apps german - Aug 02 2022
web oct 9 2013 buy windows phone 8 kochbuch für professionelle apps german edition read kindle store reviews amazon com
windows phone 8 kochbuch für professionelle apps - Aug 14 2023
web windows phone 8 kochbuch für professionelle apps matthias fischer isbn 9783868021073 kostenloser versand für alle bücher mit versand und verkauf duch
windows phone 8 kochbuch für professionelle apps paperback - Jul 01 2022
web windows phone 8 kochbuch für professionelle apps on amazon com au free shipping on eligible orders windows phone 8 kochbuch für professionelle apps
microsoft windows phone 8 wikipedia - Sep 22 2021
web microsoft windows phone 8 oder auch microsoft windows phone 8 1 genannt ist ein betriebssystem des us amerikanischen unternehmens microsoft für mobiltelefone es
das windows phone 8 das schnelle farbige handbuch einfach - Dec 26 2021
web das windows phone 8 das schnelle farbige handbuch einfach alles können sonstige bücher m t immler christian isbn 9783827248275 kostenloser versand für alle
windows phone 8 kochbuch fur professionelle apps download - Mar 29 2022
web 4 windows phone 8 kochbuch fur professionelle apps 2020 01 05 volved what kind of trou ble are the girls stirring up for themselves css cookbook o reilly media inc
windows phone 8 kochbuch für professionelle apps goodreads - Oct 04 2022
web es handelt sich dabei um ein komplett überarbeitetes betriebssystem welches sich einen gemeinsamen systemkern mit windows 8 teilt windows phone 8 bietet auf der basis
Übersicht aller wp8 applikationen - Nov 24 2021
web diese windows phone 8 applikation zeigt ihnen das aktuelle fernsehprogram an es sind deutsche österreichische sowie schweizer sender verfügbar desweitern ist für sf1
windows phone 8 kochbuch für professionelle apps paperback - Feb 08 2023
web windows phone 8 kochbuch für professionelle apps fischer matthias amazon co uk books
windows phone 8 kochbuch fur professionelle apps ci kubesail - Feb 25 2022

web windows phone 8 kochbuch fur professionelle apps 3 3 common tasks if you are an administrator who wants to master microsoft server virtualization with windows server

windows phone 8 kochbuch für professionelle apps e book - Jul 13 2023

web lese windows phone 8 kochbuch für professionelle apps gratis von matthias fischer verfügbar als e book jetzt 14 tage gratis testen 30 tage gratis jederzeit kündbar

windows phone 8 kochbuch für professionelle apps german - May 31 2022

web windows phone 8 kochbuch für professionelle apps german edition ebook fischer matthias amazon in kindle store

windows phone 8 kochbuch für professionelle apps paperback - Apr 10 2023

web sep 30 2013 windows phone 8 kochbuch für professionelle apps fischer matthias on amazon com free shipping on qualifying offers windows phone 8 kochbuch

windows phone 8 kochbuch für professionelle apps paperback - Nov 05 2022

web amazon in buy windows phone 8 kochbuch für professionelle apps book online at best prices in india on amazon in read windows phone 8 kochbuch für

windows phone 8 on apple books - Jan 07 2023

web dieses buch ist ein begleiter auf ihrem weg von der net entwicklung mit c hin zur mobilen anwendungsentwicklung auf der windows phone 8 plattform genre

get it done auf windows phone 8 aufgabenliste und task - Oct 24 2021

web die benutzerfreundlichste aufgabenliste mit task manager jetzt auch auf windows phone 8 greifen sie mit ihrem windows phone 8 von überall aus drahtlos auf ihr online

windows phone 8 kochbuch für professionelle apps ebook - Apr 29 2022

web windows phone 8 kochbuch für professionelle apps ebook fischer matthias amazon de books

windows phone 8 kochbuch für professionelle apps ebook - Mar 09 2023

web oct 10 2013 mit windows phone 8 wird die microsoft plattform mobil microsoft geht mit ihrem hauseigenen mobilen betriebssystem in die zweite runde dabei ist die