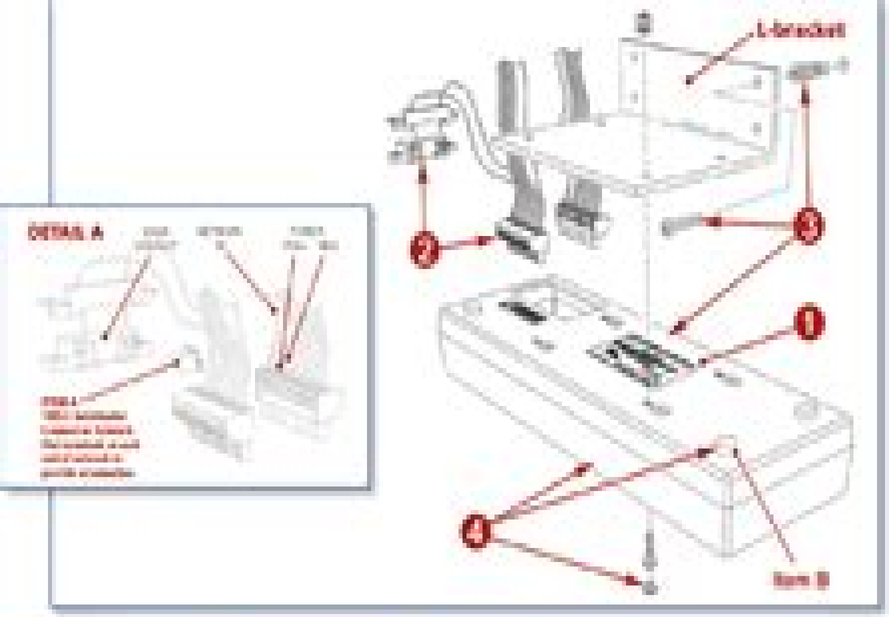

Installing the Exciter

- **Ensure that the power supply and network are turned off to prevent electrical shock or damage to equipment.**
- **Touch your hand to ground to discharge any electrostatic charge before handling the Exciter.**

The steps below correspond to the numbers in **Figure 1**.

1. Locate and record the LonWorks identification number onto the facility floor plan indicating the Exciter's position and network wiring path. Use the tear-away sticker on the Exciter's Neuron ID label.
2. Install the supplied door contact or PIR sensor according to the manufacturer's instructions and connect it to the terminal, as shown in the wiring diagram. Connect the LonWorks Network IN, Network OUT, and Power Supply to the terminal blocks, as shown in the wiring diagrams. If the Exciter is at the end of the network, then terminate the network segment with Item A (105 Ω terminator). Refer to **Detail A**, and insert the terminals into the connectors on the Exciter.

Note: If installing keypads or accessory devices, or if using a master/slave configuration, proceed to the relevant sections on the opposite page, and then return to steps 3 and 4.

3. Ensure that the status LED of the Exciter will be visible. Refer to the facility floor plan for location, and using the Exciter L-bracket as a template mark the location of the four mounting holes. Drill the holes.
4. Mount the Exciter.

L-bracket installation

A. Install in the four mounting holes:
4 hollow wall anchors

B. Attach the Exciter to the L-bracket, using:
4 No. 10 stainless steel machine screws
4 stainless steel hex nuts
4 No. 10 stainless steel flat washers

C. Attach the assembled Exciter and L-bracket to the previously installed hollow wall anchors, using:
4 No. 10 wood screws x 1 in. long

Surface mount installation

A. Install in the four mounting holes:
4 hollow wall anchors

B. Insert into the wall anchors, leaving 3/8 in. (0.5 cm) of the shaft exposed:
4 No. 10 wood screws x 1 in. long

C. If using surface wire conduit, attach the four supplied bumpers (Item B in **Figure 1**) to the underside of the Exciter.

D. Align the Exciter with the mounting screws, and while lightly pressing, slide until it is securely in place. Insert the supplied screw caps.

Installation is complete. Proceed to **Final Steps** below.

Installing Keypads

A single keypad may be connected to an Exciter to enable an infant to be tagged out at the door. The keypad also releases the Exciter's relays, for example, to disengage a magnetic door lock. Hugs uses the Wiegand-standard KTP-103SN keypad, which offers individual passwords for each user.

Refer to the Hugs Installation Manual and the manufacturer's instructions. Keypads may be connected to either master or slave Exciter.

Note: The keypad requires a separate 12 VDC power supply.

Installing Accessory Devices

Each Exciter has two 30 VDC, 1 Amp, NO or NC relays for controlling accessory devices, such as magnetic door locks and high output alarms.

Refer to the Hugs Installation Manual and the manufacturer's instructions for installation procedures. Devices may be connected to either master or slave Exciters; connect devices to the master Exciter's relays first, then connect additional devices to the slave Exciter, starting with the closest.

Note: Accessory devices require their own power supply.

Master/Slave Installations

Master and slave Exciters are installed and connected to the LonWorks network in the same way as other Exciters, with the following additions:

- All Exciters in a master/slave group are connected to each other through their M/S and ground terminals using 20 AWG wire, as shown in the wiring diagrams.

For slave Exciters using their own ID numbers, the following is also required, as shown in **Figure 3**:

- The mag lock (or elevator hold) outputs are wired to the relays on both the master and the slave to ensure that all doors in the vicinity will lock when a tag is present.
- Door contacts are wired together in series to the door contact input on both the master and the slave. The result is that when any door in a master/slave configuration is open, the system behaves as if all doors are open: an alarm will occur if a tag is at a door in the vicinity of a door that is open.

Final Steps

Do not supply power to the Exciter or any other network device until all connections are complete.

Once all devices are installed, power up the Exciter and other devices. In the Hugs system software, run Auto Configure to install the new devices, and then configure them for operation.

The coverage area of each Exciter must also be checked.

Refer to the Hugs Installation Manual (p/n 8050181) for detailed information on how to complete these steps.

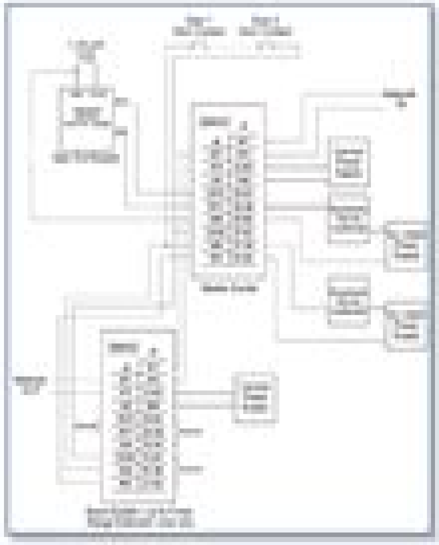

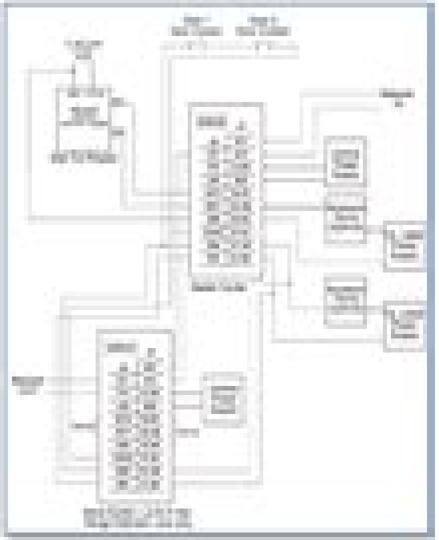

Iex User Guide

DJ Losen

Iex User Guide:

An Application of the Interregional I/O Model for the Study of the Impact of the McClellan-Kerr Arkansas River Multiple Purpose Project Ungsoo Kim,Cheol Park,Sang Kyung Kwak,1977 **Traffic Network Analysis with NETSIM- a User Guide** United States. Federal Highway Administration,1980 **User's Guide for the Updated EST/BEST Software System** Ashwin Shah,2003 **Structural/aerodynamic Blade Analyzer (SAB) User's Guide, Version 1.0** ,1994 **Nuclear Engine System Simulation (NESS). Version 2.0: Program User's Guide** Dennis G. Pelaccio,1993 **High-Frequency Trading and Dark Pools: The Complexity of Financial Markets** William Troyaux,2023-07-04 You will find in this book exclusive interviews of renowned specialists about market microstructure and high frequency trading strategies on lit markets and Dark Pools This book was developed following extensive research to democratize as many aspects as possible on US and European market microstructure high frequency trading strategies and Dark Pools Today financial markets have become extremely complex Market automation and new regulations have encouraged the emergence of new market players high frequency traders These new players hold intraday positions They deploy their specific orders and arbitrage strategies across multiple markets at close to the speed of light to get the best prices and to trade ahead of other market participants Dark Pools whose operations are also difficult to understand for most professionals have been created adding complexity to financial markets Dark Pools seems a little bit scary However we will see that Dark Pools are advantageous in terms of price compared to regulated markets Fantastic job explaining some tough to understand topics Joe Saluzzi Partner and co founder of Themis Trading and co author of the book Broken Markets William s message High frequency trading is a small world that is difficult to access I have spent a large part of this last year writing this book taking into account the interviews I have been able to carry out in order to democratize as many aspects as possible Many thanks to Joe Saluzzi Alexandre Laumonier Dave Lauer Beno t Lallemand Jean Philippe Bouchaud and Donald MacKenzie This book will help you to better understand the winning strategies of high frequency trading firms **TERI Energy Data Directory (TEDDY) 2009** Teri,2009-01-01 *Automated Data Systems Manual, Standard Installation/Division Personnel System - United States Army Reserve: attachment 4. Data reference guide* ,1985 *Exploring Graphs with Elixir* Tony Hammond,2022-11-02 Data is everywhere it s just not very well connected which makes it super hard to relate dataset to dataset Using graphs as the underlying glue you can readily join data together and create navigation paths across diverse sets of data Add Elixir with its awesome power of concurrency and you ll soon be mastering data networks Learn how different graph models can be accessed and used from within Elixir and how you can build a robust semantics overlay on top of graph data structures We ll start from the basics and examine the main graph paradigms Get ready to embrace the world of connected data Graphs provide an intuitive and highly flexible means for organizing and querying huge amounts of loosely coupled data items These data networks or graphs in math speak are typically stored and queried using graph databases Elixir with its noted support for fault tolerance and concurrency stands out as a language eminently suited to processing sparsely connected and distributed datasets Using Elixir and graph aware packages in the Elixir ecosystem you ll easily be able to fit your data to graphs and networks and gain new information insights Build a testbed app for comparing native graph data with external graph databases Develop a set of applications under a single umbrella app to drill down into graph structures Build graph models in Elixir and query graph databases of various stripes using Cypher and Gremlin with property graphs and SPARQL with RDF graphs Transform data from one graph modeling regime to another Understand why property graphs are especially good at graph traversal problems while RDF graphs shine at integrating different semantic models and can scale up to web proportions Harness the outstanding power of concurrent processing in Elixir to work with distributed graph datasets and manage data at scale What You Need To follow along with the book you should have Elixir 1 10 installed The book will guide you through setting up an umbrella application for a graph testbed using a variety of graph databases for which Java SDK 8 is generally required Instructions for installing the graph databases are given in an appendix **Proceedings of the Twenty-sixth Midwest Symposium on Circuits and Systems** Edgar Sánchez-Sinencio,1983 **Gray Hat Hacking: The Ethical Hacker's Handbook, Sixth Edition** Allen Harper,Ryan Linn,Stephen Sims,Michael Baucom,Huascar Tejeda,Daniel Fernandez,Moses Frost,2022-03-11 Up to date strategies for thwarting the latest most insidious network attacks This fully updated industry standard security resource shows step by step how to fortify computer networks by learning and applying effective ethical hacking techniques Based on curricula developed by the authors at major security conferences and colleges the book features actionable planning and analysis methods as well as practical steps for identifying and combating both targeted and opportunistic attacks Gray Hat Hacking The Ethical Hacker s Handbook Sixth Edition clearly explains the enemy s devious weapons skills and tactics and offers field tested remedies case studies and testing labs You will get complete coverage of Internet of Things mobile and Cloud security along with penetration testing malware analysis and reverse engineering techniques State of the art malware ransomware and system exploits are thoroughly explained Fully revised content includes 7 new chapters covering the latest threats Includes proof of concept code stored on the GitHub repository Authors train attendees at major security conferences including RSA Black Hat Defcon and Besides *Reference Manual for the RILM Automated Bibliographic System* Philip J. Drummond,1976

PC Mag ,1983-07 PCMag com is a leading authority on technology delivering Labs based independent reviews of the latest products and services Our expert industry analysis and practical solutions help you make better buying decisions and get more from technology **Information Bulletin** ILLINET/OCLC Service,1988 *New Supervisor Training* John E. Jones,Chris W. Chen,2006 The Trainer s Workshop Series is designed to be a practical hands on roadmap to help you quickly develop training in key business areas Each book in the series offers all the exercises handouts assessments structured experiences and ready to use presentations needed to develop effective training sessions In addition to easy to use icons each book in the series includes a companion CD ROM with PowerPoint TM presentations and electronic copies of all supporting material featured in the book New Supervisor Training helps new and experienced supervisors make the transition from individual contributor to leader with ready made training tools and materials This guide includes sections on interactive training evaluation and improvement and provides key skills to new leaders Contains exercises handouts assessments and tools to help you set up supervisor training in record time provide key skills to new leaders become a more effective and efficient facilitator ensure training is on target and gets results Jones and Chen share a wealth of practical experience aimed at the realities of becoming and succeeding as a new supervisor This is required reading for trainers Ed Oxford Vice President and Director Leadership Learning and Performance Commercial Government and Industrial Solutions Sector Motorola Inc Other books in this series Leadership Training Customer Service Training New Employee Orientation Training Leading Change Training **CompTIA PenTest+ Certification All-in-One Exam Guide, Second Edition (Exam PT0-002)** Heather Linn,Raymond Nutting,2022-04-01 This fully updated guide delivers complete coverage of every topic on the current version of the CompTIA PenTest certification exam Get complete coverage of all the objectives included on the CompTIA PenTest certification exam PT0 002 from this comprehensive resource Written by expert penetration testers the book provides learning objectives at the beginning of each chapter hands on exercises exam tips and practice questions with in depth explanations Designed to help you pass the exam with ease this definitive volume also serves as an essential on the job reference Covers all exam topics including Planning and engagement Information gathering Vulnerability scanning Network based attacks Wireless and radio frequency attacks Web and database attacks Cloud attacks Specialized and fragile systems Social Engineering and physical attacks Post exploitation tools and techniques Post engagement activities Tools and code analysis And more Online content includes 170 practice exam questions Interactive performance based questions Test engine that provides full length practice exams or customizable quizzes by chapter or exam objective **PC Mag** ,1994-09-13 PCMag com is a leading authority on technology delivering Labs based independent reviews of the latest products and services Our expert industry analysis and practical solutions help you make better buying decisions and get more from technology The Official Railway Guide ,1891 The Official Guide of the Railways and Steam Navigation Lines of the United States, Porto Rico, Canada, Mexico and Cuba ,1908 Reverse Acronyms, Initialisms, & Abbreviations Dictionary ,2009

Right here, we have countless books **Iex User Guide** and collections to check out. We additionally provide variant types and afterward type of the books to browse. The suitable book, fiction, history, novel, scientific research, as capably as various new sorts of books are readily available here.

As this Iex User Guide, it ends in the works brute one of the favored ebook Iex User Guide collections that we have. This is why you remain in the best website to look the unbelievable ebook to have.

https://old.whatgoodnews.com/public/detail/fetch.php/Imm_00instructions_Guide.pdf

Table of Contents Iex User Guide

1. Understanding the eBook Iex User Guide
    - The Rise of Digital Reading Iex User Guide
    - Advantages of eBooks Over Traditional Books
2. Identifying Iex User Guide
    - Exploring Different Genres
    - Considering Fiction vs. Non-Fiction
    - Determining Your Reading Goals
3. Choosing the Right eBook Platform
    - Popular eBook Platforms
    - Features to Look for in an Iex User Guide
    - User-Friendly Interface
4. Exploring eBook Recommendations from Iex User Guide
    - Personalized Recommendations
    - Iex User Guide User Reviews and Ratings
    - Iex User Guide and Bestseller Lists
5. Accessing Iex User Guide Free and Paid eBooks
    - Iex User Guide Public Domain eBooks

   - Iex User Guide eBook Subscription Services
   - Iex User Guide Budget-Friendly Options
6. Navigating Iex User Guide eBook Formats
   - ePub, PDF, MOBI, and More
   - Iex User Guide Compatibility with Devices
   - Iex User Guide Enhanced eBook Features
7. Enhancing Your Reading Experience
   - Adjustable Fonts and Text Sizes of Iex User Guide
   - Highlighting and Note-Taking Iex User Guide
   - Interactive Elements Iex User Guide
8. Staying Engaged with Iex User Guide
   - Joining Online Reading Communities
   - Participating in Virtual Book Clubs
   - Following Authors and Publishers Iex User Guide
9. Balancing eBooks and Physical Books Iex User Guide
   - Benefits of a Digital Library
   - Creating a Diverse Reading Collection Iex User Guide
10. Overcoming Reading Challenges
   - Dealing with Digital Eye Strain
   - Minimizing Distractions
   - Managing Screen Time
11. Cultivating a Reading Routine Iex User Guide
   - Setting Reading Goals Iex User Guide
   - Carving Out Dedicated Reading Time
12. Sourcing Reliable Information of Iex User Guide
   - Fact-Checking eBook Content of Iex User Guide
   - Distinguishing Credible Sources
13. Promoting Lifelong Learning
   - Utilizing eBooks for Skill Development
   - Exploring Educational eBooks

14. Embracing eBook Trends
    - Integration of Multimedia Elements
    - Interactive and Gamified eBooks

Iex User Guide Introduction

In this digital age, the convenience of accessing information at our fingertips has become a necessity. Whether its research papers, eBooks, or user manuals, PDF files have become the preferred format for sharing and reading documents. However, the cost associated with purchasing PDF files can sometimes be a barrier for many individuals and organizations. Thankfully, there are numerous websites and platforms that allow users to download free PDF files legally. In this article, we will explore some of the best platforms to download free PDFs. One of the most popular platforms to download free PDF files is Project Gutenberg. This online library offers over 60,000 free eBooks that are in the public domain. From classic literature to historical documents, Project Gutenberg provides a wide range of PDF files that can be downloaded and enjoyed on various devices. The website is user-friendly and allows users to search for specific titles or browse through different categories. Another reliable platform for downloading Iex User Guide free PDF files is Open Library. With its vast collection of over 1 million eBooks, Open Library has something for every reader. The website offers a seamless experience by providing options to borrow or download PDF files. Users simply need to create a free account to access this treasure trove of knowledge. Open Library also allows users to contribute by uploading and sharing their own PDF files, making it a collaborative platform for book enthusiasts. For those interested in academic resources, there are websites dedicated to providing free PDFs of research papers and scientific articles. One such website is Academia.edu, which allows researchers and scholars to share their work with a global audience. Users can download PDF files of research papers, theses, and dissertations covering a wide range of subjects. Academia.edu also provides a platform for discussions and networking within the academic community. When it comes to downloading Iex User Guide free PDF files of magazines, brochures, and catalogs, Issuu is a popular choice. This digital publishing platform hosts a vast collection of publications from around the world. Users can search for specific titles or explore various categories and genres. Issuu offers a seamless reading experience with its user-friendly interface and allows users to download PDF files for offline reading. Apart from dedicated platforms, search engines also play a crucial role in finding free PDF files. Google, for instance, has an advanced search feature that allows users to filter results by file type. By specifying the file type as "PDF," users can find websites that offer free PDF downloads on a specific topic. While downloading Iex User Guide free PDF files is convenient, its important to note that copyright laws must be respected. Always ensure that the PDF files you download are legally available for free. Many authors and publishers voluntarily provide free PDF versions of their work, but its essential to be cautious and verify the authenticity of the source before downloading Iex User Guide. In conclusion, the internet offers numerous platforms and websites that allow users to download free PDF files legally. Whether its classic literature, research papers, or magazines, there is something for everyone. The platforms mentioned in this article, such as Project Gutenberg, Open Library, Academia.edu, and Issuu, provide access to a vast collection of PDF files. However, users should always be cautious and verify the legality of the source before downloading Iex User Guide any PDF files. With these platforms, the world of PDF downloads is just a click away.

FAQs About Iex User Guide Books

How do I know which eBook platform is the best for me? Finding the best eBook platform depends on your reading preferences and device compatibility. Research different platforms, read user reviews, and explore their features before making a choice. Are free eBooks of good quality? Yes, many reputable platforms offer high-quality free eBooks, including classics and public domain works. However, make sure to verify the source to ensure the eBook credibility. Can I read eBooks without an eReader? Absolutely! Most eBook platforms offer web-based readers or mobile apps that allow you to read eBooks on your computer, tablet, or smartphone. How do I avoid digital eye strain while reading eBooks? To prevent digital eye strain, take regular breaks, adjust the font size and background color, and ensure proper lighting while reading eBooks. What the advantage of interactive eBooks? Interactive eBooks incorporate multimedia elements, quizzes, and activities, enhancing the reader engagement and providing a more immersive learning experience. Iex User Guide is one of the best book in our library for free trial. We provide copy of Iex User Guide in digital format, so the resources that you find are reliable. There are also many Ebooks of related with Iex User Guide. Where to download Iex User Guide online for free? Are you looking for Iex User Guide PDF? This is definitely going to save you time and cash in something you should think about.

Find Iex User Guide :

imm 00instructions guide
in my hands memories of a holocaust rescuer
incororation masters guide
in car safety quick guide
in too deep table book
impex marcy home gym exercises cr4 manual
immunity pogil answers

immune system by peter parham 3rd edition
in my own time
imp questin of 171msbte
imaq vision concepts manual
impco ca 100 manual
income tax fundamentals 2whittenburg 31st edition solutions manual
improving vocabulary skills fourth edition
in pursuit of justice justice series book english edition

Iex User Guide :

Marcy Mathworks Marcy Mathworks now offers its best-selling enrichment books as digital downloads, including all the titles below, all selling at about half the price of the ... Marcy Mathworks Marcy Mathworks now offers its best-selling enrichment books as digital downloads, including all the titles below, all selling at about half the price of the ... Marcy Mathworks Marcy Mathworks. 1. Marcy Mathworks. Marcy Mathworks. Downloaded from web.mei.edu by guest. BEATRICE MYLA. Best Sellers - Books : • The Light We Carry: ... Bridge to Algebra Pizzazz Published by Marcy Mathworks: PUNCHLINE Problem Solving • 2nd Edition ... ©2001 Marcy Mathworks. • 19. 0.5 51 mi 78 ft 110 20 360. Expressions, Equations, and ... Marcy Mathworks Answer Key marcy mathworks answer key. Punchline Algebra Book B 2006 Marcy Mathworks Answer Key Punchline Algebra Book B - marcymathworks.livejournal. Section 11 Answers ©2006 Marcy Mathworks. Answers • 6. Page 7. Section 12 Answers. What Happened After a Bunch of Izzy Lang's Friends. Made a Giant "Happy 85th ... ©2006 Marcy ... Marcy Mathworks Punchline Algebra Book B Answer Keyrar Marcy Mathworks Punchline Algebra Book B Answer Keyrar. Marcy Mathworks Punchline Algebra Book B Answer Keyrar. Download Zip. 2001 Marcy Mathworks - PUNCHLINE • Bridge to Algebra ©2001 Marcy Mathworks. PUNCHLINE • Bridge to Algebra. WHAT IS THE TITLE OF ... ©2001 Marcy Mathworks. Equations, Problems, and Functions: • 38 •. Solving One ... does anyone have an ounce of respect - Rasta Science ... does anyone have an ounce of respect Rasta Science Teacher. İngiltere'deki en iyi yeni çevrimiçi kumarhaneler [3PQR8V] beyin emarı fiyatları 2022 - hsm radyoloji, casinogrounds türkiye, limanbet yeni adres değişikliği 51 limanbet güncel adres, colonybet kullanıcı yorumları ... Unshort urls with 3pq of any services We unshort and check all urls with 3pq on: HTTP status code, Google Safe Browsing, WOT, Short-short url and Spam abuses. The Theory of Stochastic Processes - 1st Edition - D.R. Cox The Theory of Stochastic Processes - 1st Edition - D.R. Cox Amazon.com: The Theory of Stochastic Processes This book provides an introductory account of the mathematical analysis of stochastic processes. It is helpful for statisticians and applied mathematicians ... The Theory of Stochastic Processes - D.R. Cox, H.D. Miller Feb 1, 1977 — This book provides an introductory account of the mathematical analysis of stochastic processes. It is helpful for statisticians and applied ... The Theory of Stochastic Processes | D.R. Cox by DR Cox · 2017 · Cited by 6212 — The Theory of Stochastic Processes ; ByD.R. Cox. Edition 1st Edition ; First Published 1977 ; eBook Published 24 October 2017 ; Pub. Location Boca Raton. DR Cox and HD MILLER, The Theory of Stochastic ... by NU Prabhu · 1966 — Cox and H. D. MILLER, The Theory of Stochastic Processes, Wiley, New. York, 1965. x+398 pp, $11.50. REVIEW BY N. U. PRABHU'. Cornell University. In the preface ... The Theory of Stochastic Processes (Paperback) The Theory of Stochastic Processes (Paperback). By D. R. Cox, H. D. Miller. $220.00. Usually Ships from Wholesaler in 1-5 Days (This book cannot ... The Theory of Stochastic Processes by David Roxbee Cox David Roxbee Cox, H.D. Miller This book provides an introductory account of the mathematical analysis of stochastic processes. It is helpful for statisticians ... The Theory of Stochastic Processes, Volume 10 The Theory of Stochastic Processes, Volume 10. Front Cover. David Roxbee Cox, Hilton David Miller. Wiley, 1965 - Stochastic processes - 398 pages. Mathematical ... The Theory of Stochastic Processes by Cox, D.R.; Miller, H.D. This book develops the main mathematical techniques useful in analyzing the special processes arising in applications. The reader is assumed to know some ... The Theory of Stochastic Processes. - Hardcover Cox, D. R. & H. D. Miller ... 9780416237603: The Theory of Stochastic Processes. ... "The theory of stochastic processes is concerned with systems which change in ...